5000 Series

A5200CU000E

Features

- 5Gbps bandwidth USB3.0 interface
- 128MB on-board frame buffer
- Support multiple image data formats
- Conform to CE, FCC, RoHS certifications
- Software trigger/Hardware trigger/Free run mode
- Conforms to USB 3.0 vision protocol and GenlCam standard

Dimensions (mm)

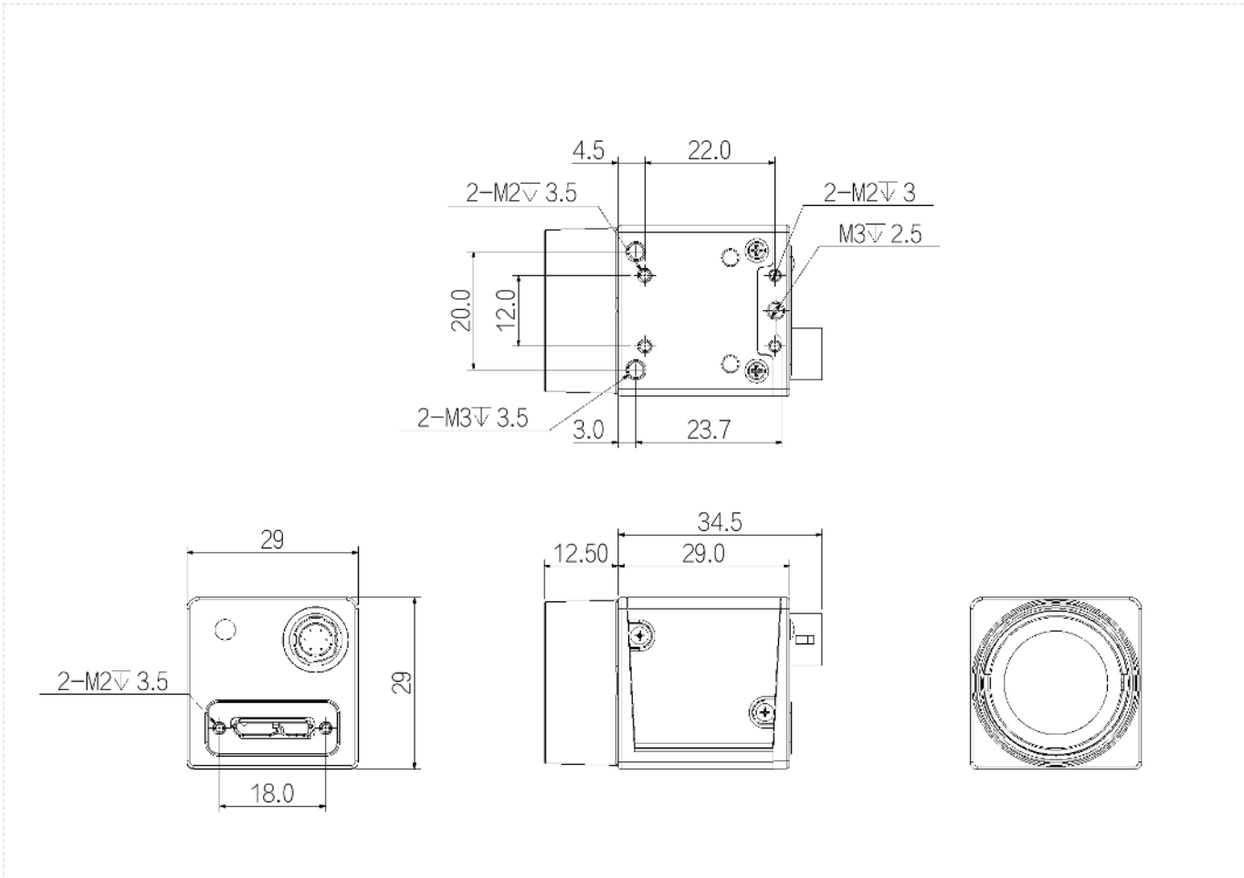

Specification

Model		A5200CU000E
Basic	Sensor	IMX430
	Image Sensor	CMOS
	Shutter	Global
	Resolution	1624×1240
	Frame Rate	89
	Bit Depth	12
	Mono/Color	Color
	Pixel Size	4.5×4.5
Image	Pixel	2.0 1MP
	S/N Ratio	>38dB
	WDR	~
	Image Format	BayerRG8/10/10Packed;BayerGB8/10/10Packed
	ROI	Support
	X Flip	Support
	Y Flip	Support
	Gain	1~32
	Gamma	Range from 0 to 4, support LUT
	Exposure Time	18 μs~1 s
	Trigger Mode	Software Trigger/Hardware Trigger/Free Run Mode
	SPC	Support
Performance	User Setting	Support two sets of user-defined configurations
	Image Buffer	64 MB
Port	Port	USB 3.0
	GPIO Interface	6 pin Hirose: 1 Opto-isolated input, 1 Opto-isolated output, 1 configurable input/output without opto isolation
	Lens Mount	C
Power	Power Supply	Power supply via USB connector /DC power supply by Hirose connector, with voltage range from 9V to 24V
	Power Consumption	≈3.2 W
Structure	Product Dimensions	29 mm×29 mm×29 mm(not including rear case connector)
	Weight	60 g
Environment	Working Environment	Storage temperature: -30° C~ + 80° C; Operation temperature: -30° C~+50° C

Connector Pin-out

Definitions of camera 6-pin ports:

Pin	Description	Features
1	-	+9VDC to 24VDC power supply
2	Line1	Opto-isolated input
3	Line2	GPIO (I/O can be configured for non-isolated software)[1]
4	Line0	Opto-isolated output
5	-	Opto-isolated signal ground (ISO_GND)
6	-	Camera DC power ground and GPIO signal ground (GND)

Definition of 6-pin power port

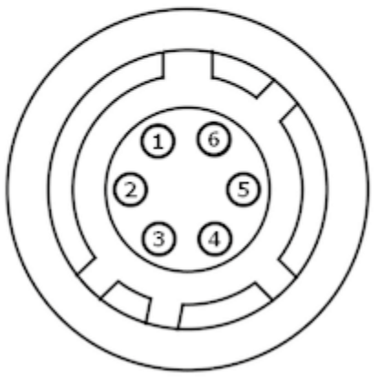

Spectrogram
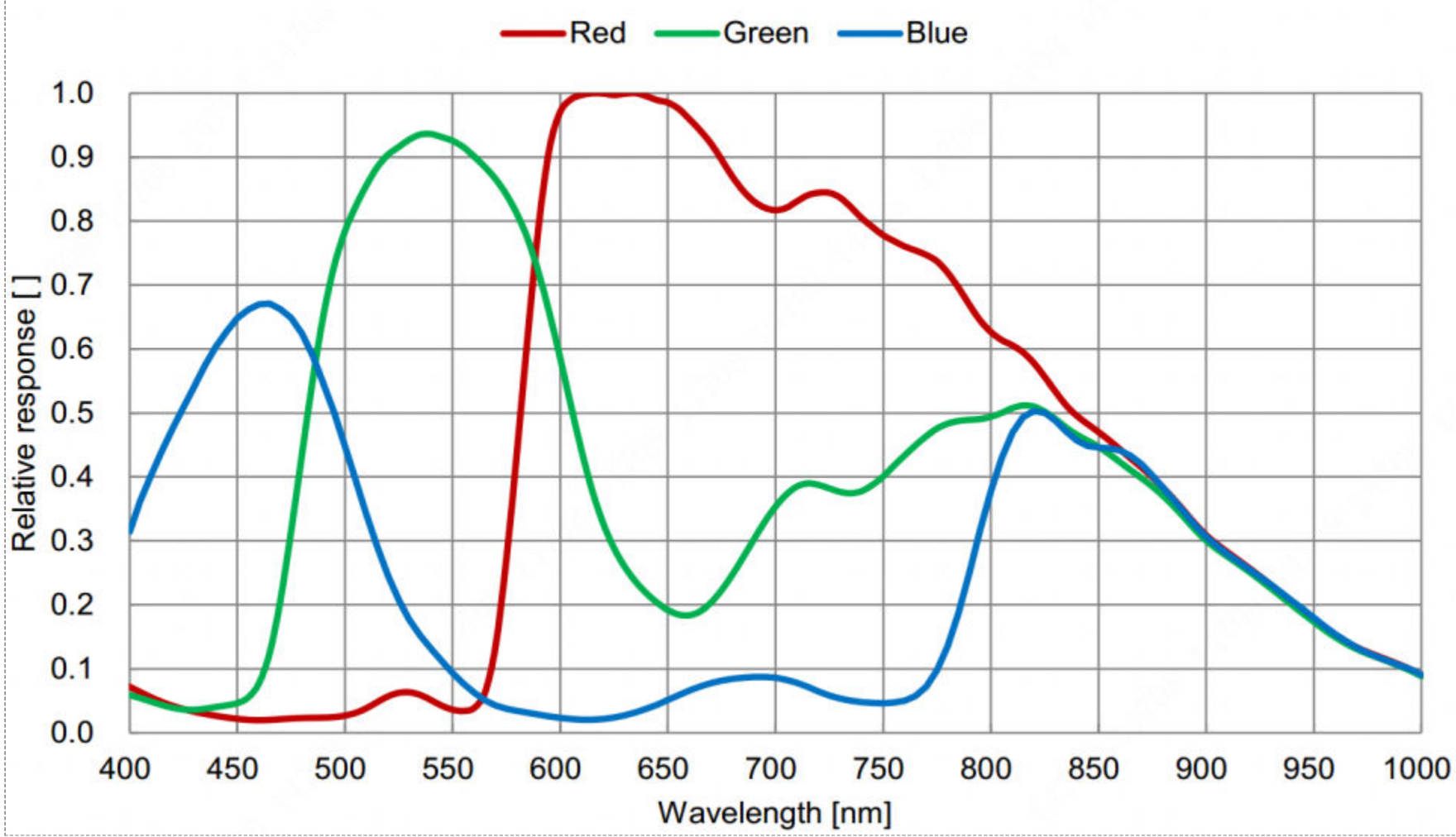
(Excludes lens characteristics and light source characteristics.)