A5B57CG200E

Product Features

Gigabit Ethernet interface, providing 1Gbps bandwidth with a maximum transmission distance of 100m;
256MB on-board cache for data transmission or image resend;
Support Software Trigger/Hardware Trigger/Free Run Mode;
Support ISP functions including Sharpness/Denoising/Gamma/LUT/BlackLevel Correction/TargetBrightness/Contrast etc.; Color cameras support interpolation, white balance, color conversion matrix, chroma, saturation, etc.;
Support multiple image data formats output/ROI/Mirror, etc.;

Dimensions (mm)

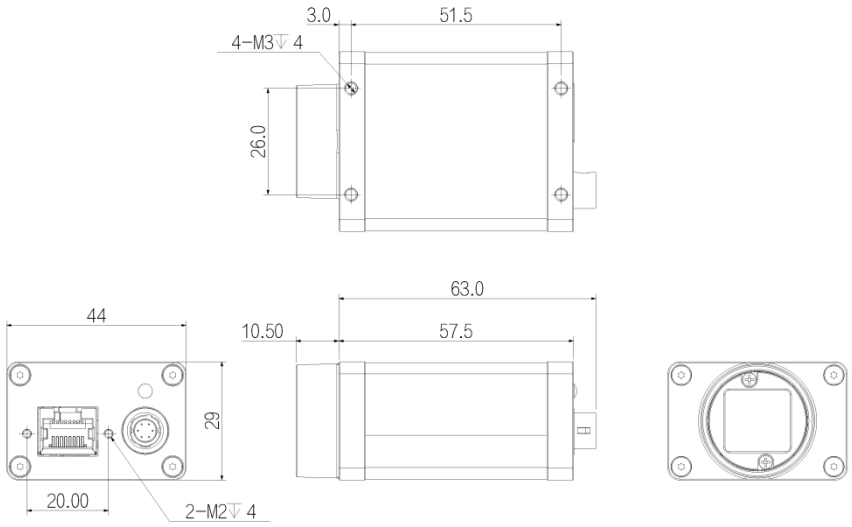

© 2021 iRAYPLE. All rights reserved. Design and specifications are subject to change without notice. Pictures in the document are for reference only, and the actual product shall prevail.

Technical Specifications

Model Name	A5B57CG200E
Sensor	Gpixel
Image Sensor	CMOS
Shutter	Global
Resolution	5120 x 5120
Frame Rate	4
Bit Depth	12
Mono/Color	Color
Pixel Size	2.5x2.5
Pixel	25MP
S/N Ratio	large 35dB
WDR	large 64dB
Image Format	Mono8,BayerRG8/10/10Packed,BayerGB8/10/10Packed，YUV422Packed
ROI	Support
X Flip	Support
Y Flip	Support
Gain	1~32
White Balance	Automatic white balance
Gamma	From 0 to 4，support LUT
Exposure Time	5μS~1S
Trigger Mode	Software Trigger/Hardware Trigger/Free Run Mode
SPC	Support
User Setting	Support two sets of user-defined configurations
Image Buffer	128MB Image Cache
Port	GigE, PoE
GPIO Interface	1x 6 pin Hirose: 1x Opto-isolated input, 1x Opto-isolated output,
Lens Mount	C-mount
Power Supply	PoE/ DC 9V~24V power supply via Hirose interface
Power Consumption	12V≈4.0W
Product Dimensions	29mm*44mm*58mm (not including lens mount and rear case connector)
Weight	100g
Working Environment	Storage: - 30℃~ 80℃ ; Operation: - 30℃~ 50℃

© 2021 iRAYPLE. All rights reserved. Design and specifications are subject to change without notice. Pictures in the document are for reference only, and the actual product shall prevail.