A5201MU150E

Product Features

USB3.0 interface, 5Gbps theoretical transfer bandwidth, power supply via USB interface ;
Compact size of 29mmx29mmx29mm;
128MB on-board cache for data transmission or image resend;
Support Software Trigger/Hardware Trigger/Free Run Mode;
Support ISP functions including Sharpness/Denoising/Gamma/LUT/BlackLevel Correction/TargetBrightness/Contrast etc.;
Support multiple image data formats output/ ROI/Binning/Mirror, etc. ;
Compatible with USB3.0 Vision protocol and GenICam standard;

Dimensions (mm)

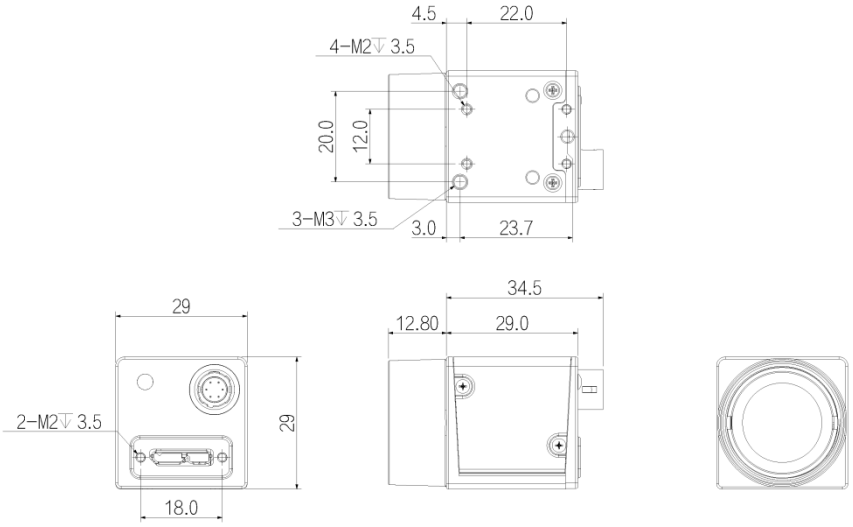

© 2021 iRAYPLE. All rights reserved. Design and specifications are subject to change without notice. Pictures in the document are for reference only, and the actual product shall prevail.

iRAYPLE

Technical Specifications

Model Name	A5201MU150E
Sensor	PYTHON 2000
Image Sensor	2/3"CMOS
Shutter	Global
Resolution	1920 x 1200
Frame Rate	150
Bit Depth	10
Mono/Color	Mono
Pixel Size	4.8x4.8
Pixel	2.3MP
S/N Ratio	large 38dB
WDR	60dB
Image Format	Mono8/10/10Packed
Binning	Support
Decimation	Support
ROI	Support
X Flip	Support
Y Flip	Support
Gain	1~32
Gamma	From 0 to 4 , support LUT
Exposure Time	60μS~1S
Trigger Mode	Software Trigger/Hardware Trigger/Free Run Mode
SPC	Support
FPN	Support
User Setting	Support two sets of user-defined configurations
Image Buffer	64MB image cache
Port	USB3.0
GPIO Interface	1x Opto-isolated input, 1x Opto-isolated output, 1 configurable input and output
Lens Mount	C
Power Supply	power supply via USB interface/ DC 9V~24V power supply via Hirose interface
Power Consumption	≈3.8W
Product Dimensions	29mm*29mm*29mm
Weight	60g
Working Environment	Storage：- 30℃~ 80℃ ; Operation：- 30℃~ 50℃

© 2021 iRAYPLE. All rights reserved. Design and specifications are subject to change without notice. Pictures in the document are for reference only, and the actual product shall prevail.