A5131CG75E

Product Features

Gigabit Ethernet interface, providing 1Gbps bandwidth with a maximum transmission distance of 100m;
128MB on-board cache for data transmission or image resend;
Support Software Trigger/Hardware Trigger/Free Run Mode;
Support ISP functions including Sharpness/Denoising/Gamma/LUT/BlackLevel Correction/TargetBrightness/Contrast etc.; Color cameras support interpolation, white balance, color conversion matrix, chroma, saturation, etc.;
Support multiple image data formats output/ROI/Mirror, etc.;

Dimensions (mm)

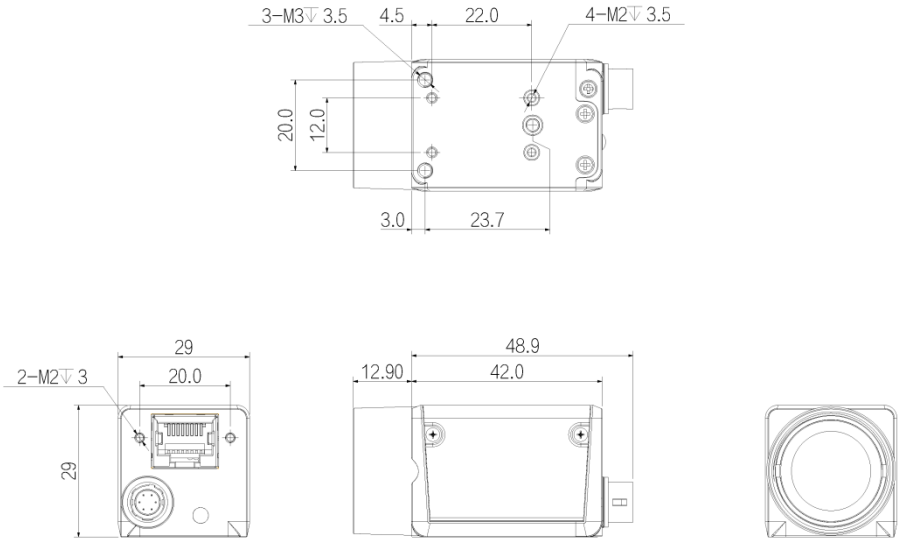

© 2021 iRAYPLE. All rights reserved. Design and specifications are subject to change without notice. Pictures in the document are for reference only, and the actual product shall prevail.

iRAYPLE

Technical Specifications

Model Name	A5131CG75E
Sensor	PYTHON 1300
Image Sensor	1/2"CMOS
Shutter	Global
Resolution	1280 x 1024
Frame Rate	75
Bit Depth	10
Mono/Color	Color
Pixel Size	4.8x4.8
Pixel	1.3MP
S/N Ratio	large 38dB
WDR	60dB
Image Format	Mono8，BayerRGB/10/10Packed，BayerGB8/10/10Packed，YUV422Packed
Decimation	Support
ROI	Support
X Flip	Support
Y Flip	Support
Gain	1~32
White Balance	Automatic white balance
Gamma	From 0 to 4，support LUT
Exposure Time	1μS~1S
Trigger Mode	Software Trigger/Hardware Trigger/Free Run Mode
SPC	Support
FPN	Support
User Setting	Support two sets of user-defined configurations
Image Buffer	64MB Image Cache
Port	GigE, PoE
GPIO Interface	1x 6 pin Hirose: 1x Opto-isolated input, 1x Opto-isolated output, 1 configurable input and output
Lens Mount	C-mount
Power Supply	PoE/ DC 9V~24V power supply via Hirose interface
Power Consumption	12V≈3.4W
Product Dimensions	29mm*29mm*42mm (not including lens mount and rear case connector)
Weight	88g
Working Environment	Storage: - 30℃~ 80℃；Operation: - 30℃~ 50℃

© 2021 iRAYPLE. All rights reserved. Design and specifications are subject to change without notice. Pictures in the document are for reference only, and the actual product shall prevail.